Vertical wooden spice box plan

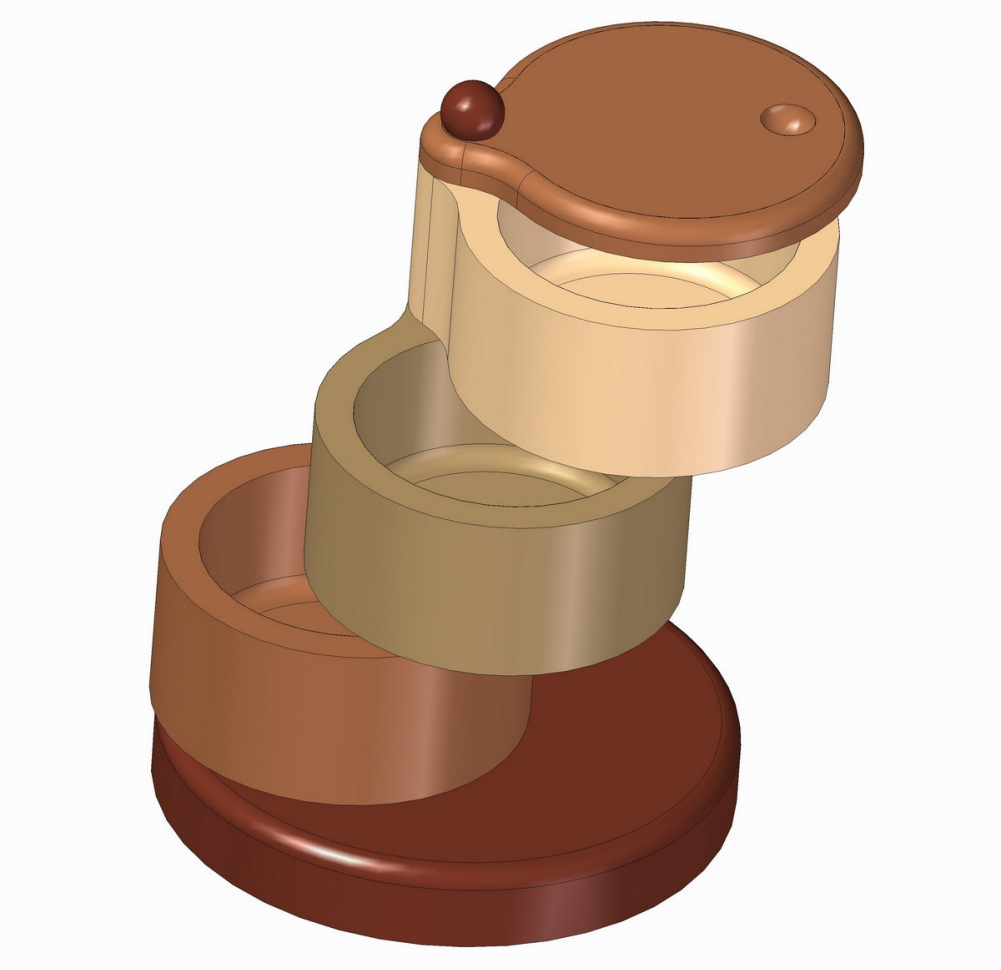

As we all know, spices are essential ingredients in each kitchen – so are the various salt and pepper boxes and canisters. Our vertical wooden spice box plans offers you a chance to make one original kitchen utensil and in the same time a nature friendly kitchen tool.

You will be surprised how easy is to make this triple wooden spice box, and how easy is to use it. Its wide openings allow you to grab the salt and pepper and third spice, like paprika, curry, etc with big spoon, or hand, by simply sliding the lid and two top boxes. Of course, you can make these boxes for different kinds of spices, or by changing its dimensions, you can easily adjust this sliding box for a different purpose.

It will last a lifetime, but be careful to wash it with warm water by hands.

For the box stability, you should make the Base (part 4) out of some kind of hard wood and the parts Bowl (part 1), Axle (part 2) and Cover (part 3) out of some lightwood.

By changing the box dimension, you can easily adjust this box for different purposes.

The measurements are given in millimeters, while the measurements given in inches are in brackets (1 inch = 25, 4 mm).

Vertical wooden spice box plan – Parts list

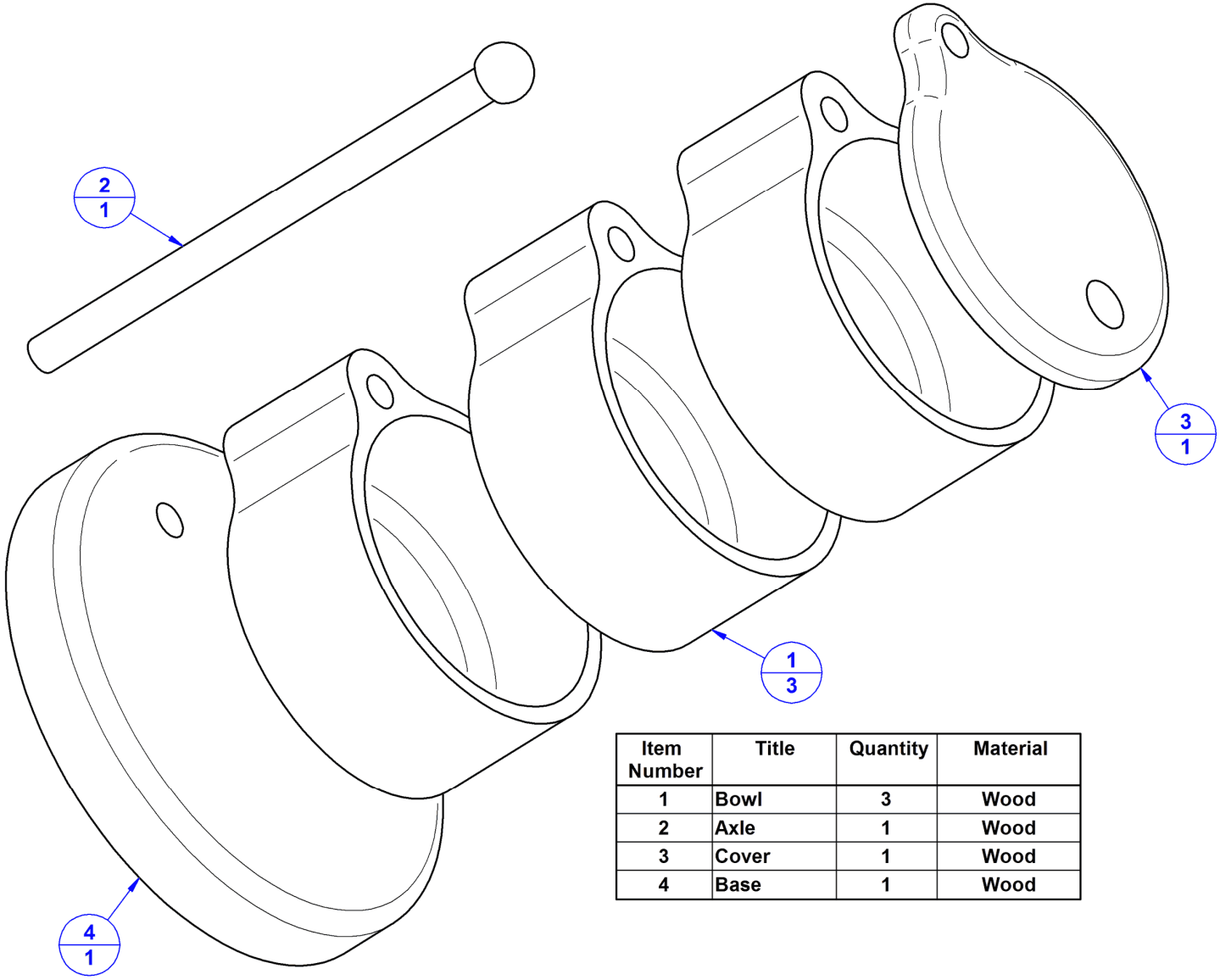

Item Number	Title	Quantity	Material
1	Bowl	3	Wood
2	Axle	1	Wood
3	Cover	1	Wood
4	Base	1	Wood

Vertical wooden spice box plan – Assembly 2D drawing

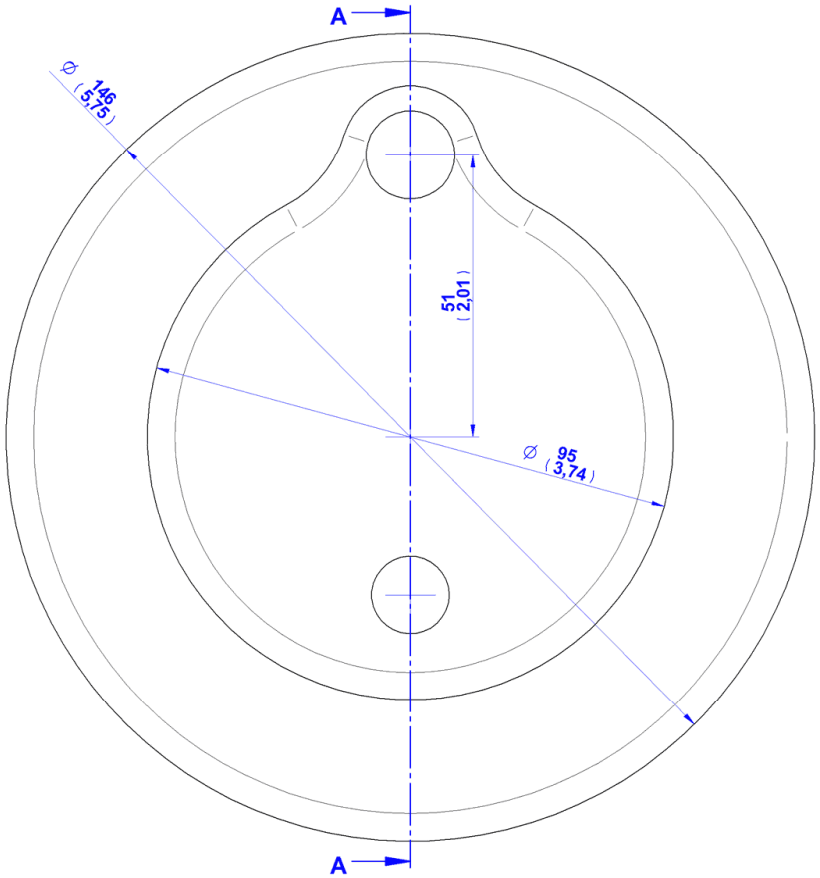

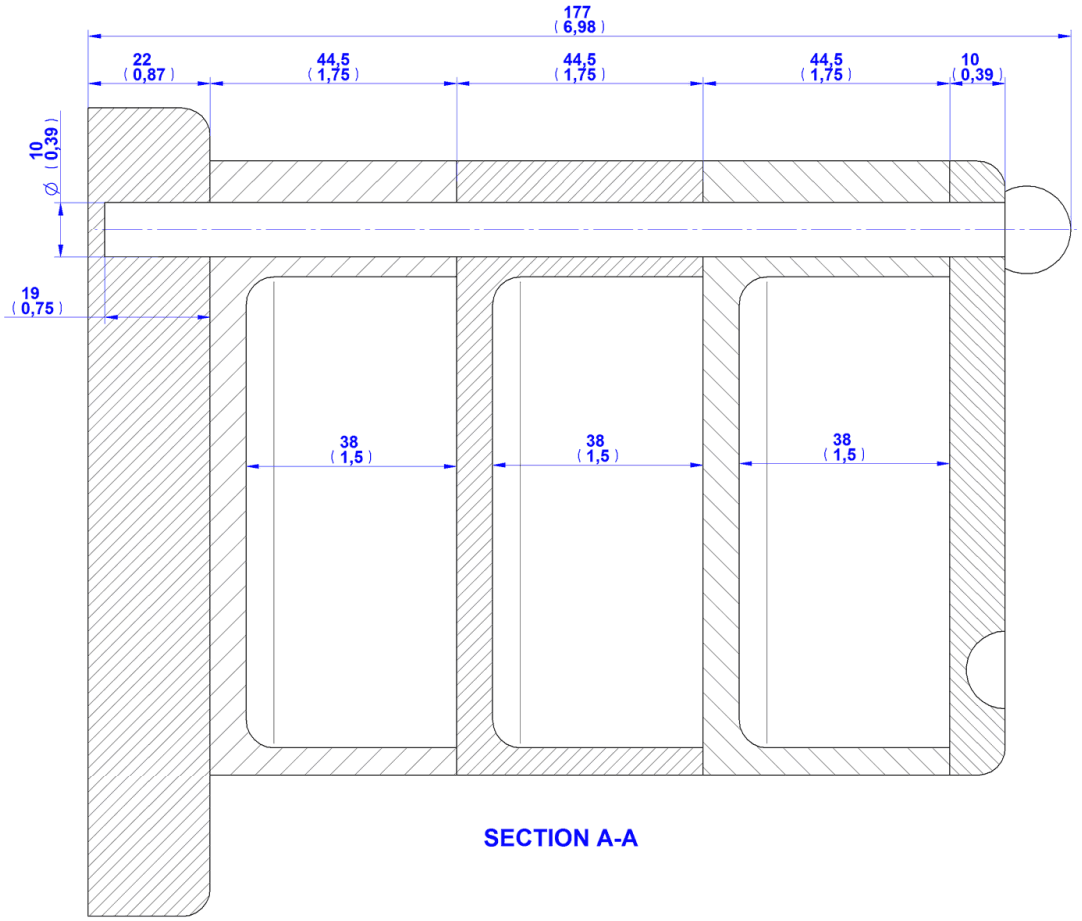

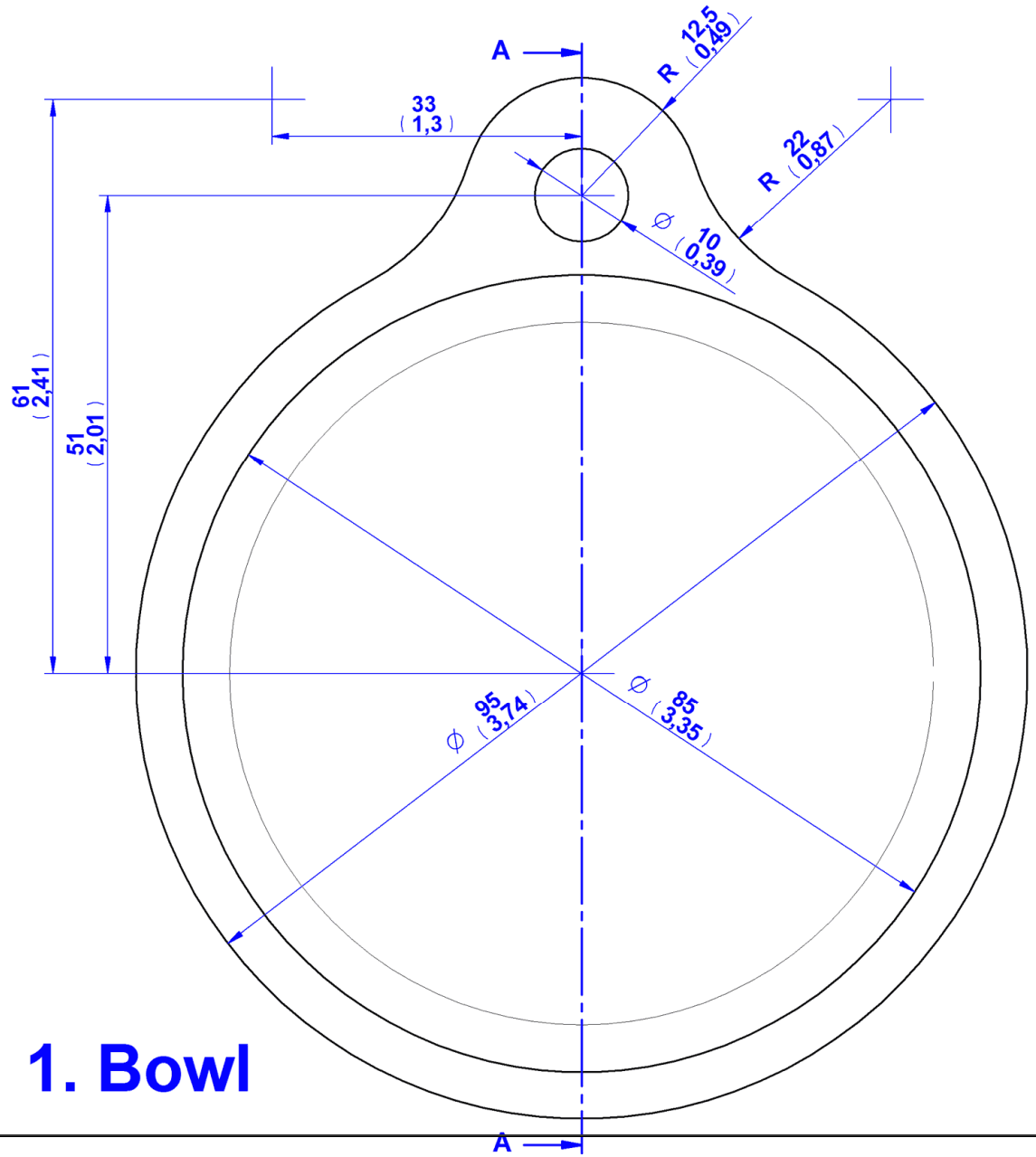

1. Bowl

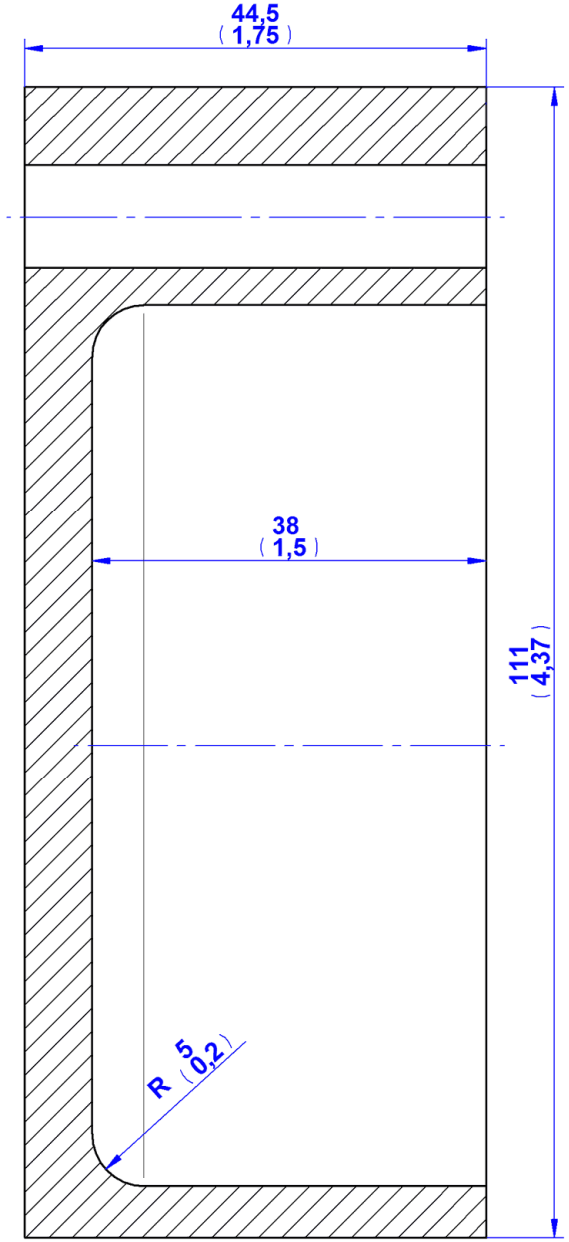

SECTION A-A

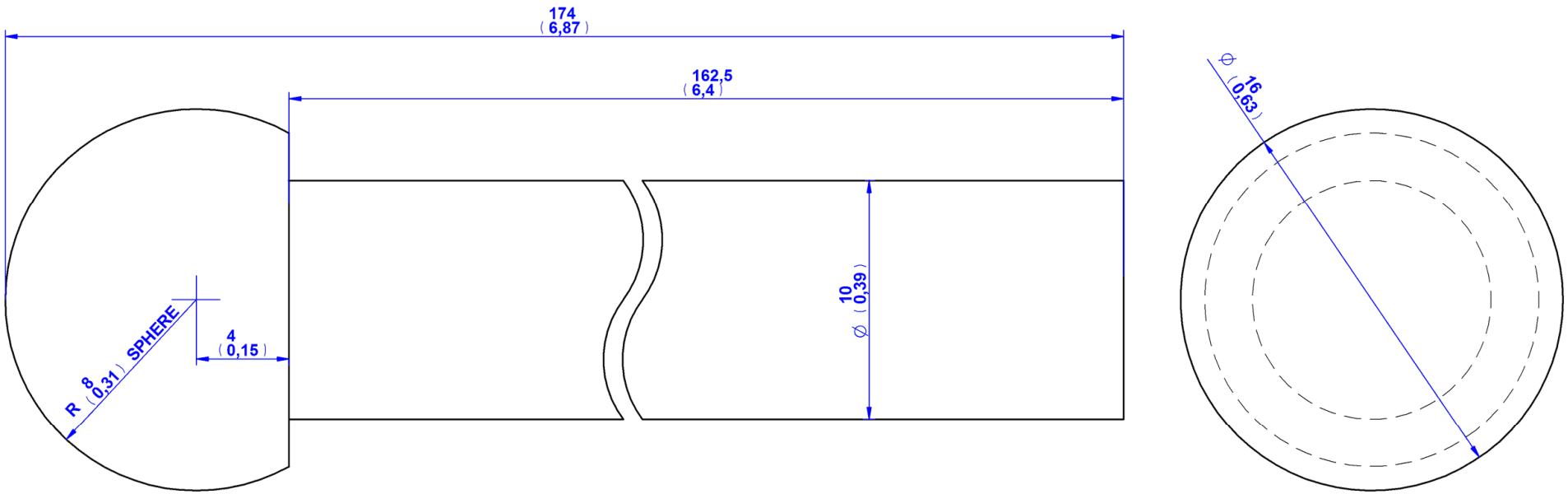

2. Axle

3. Cover

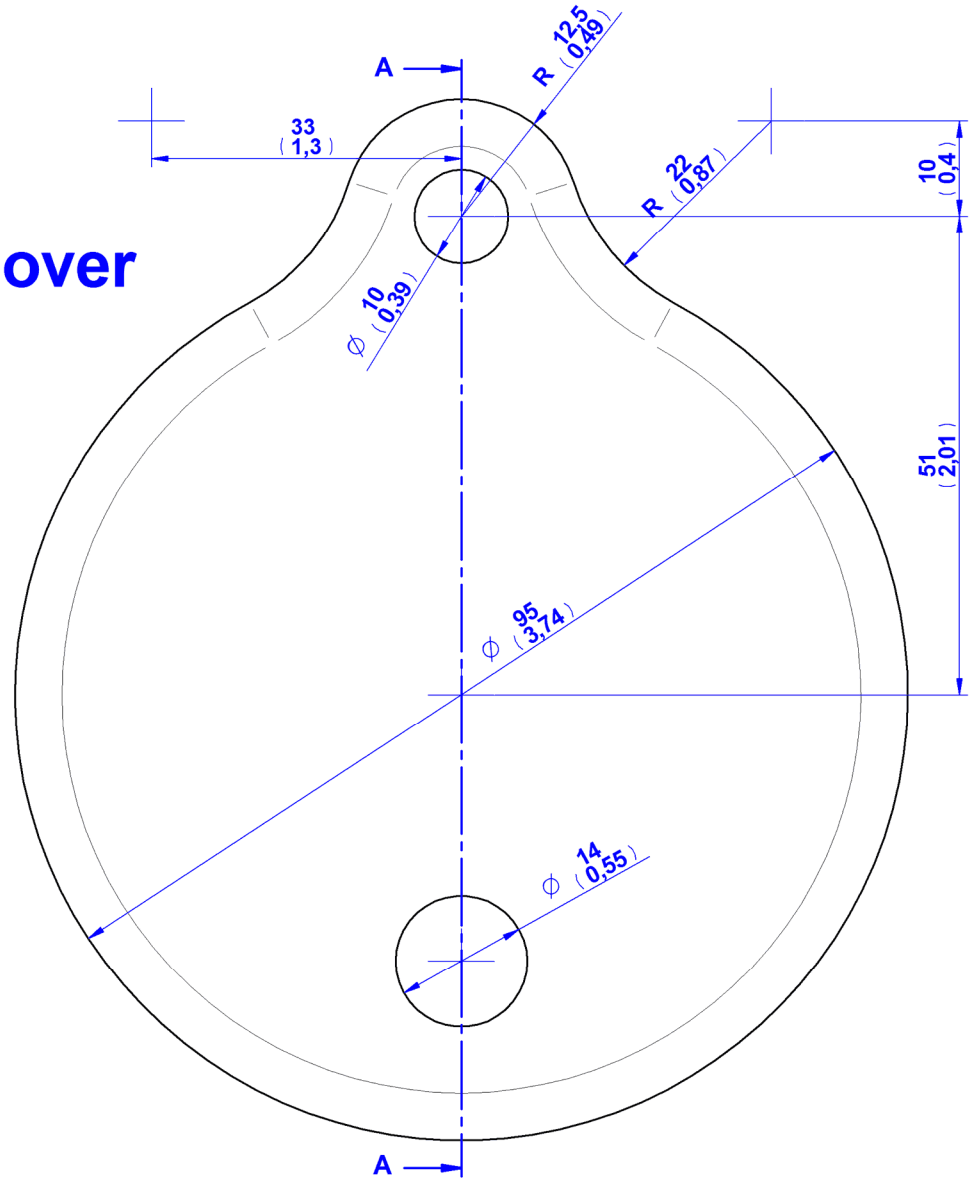

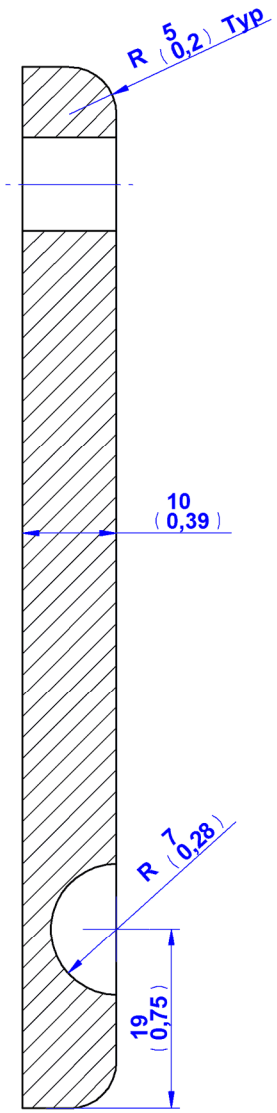

SECTION A-A

4. Base

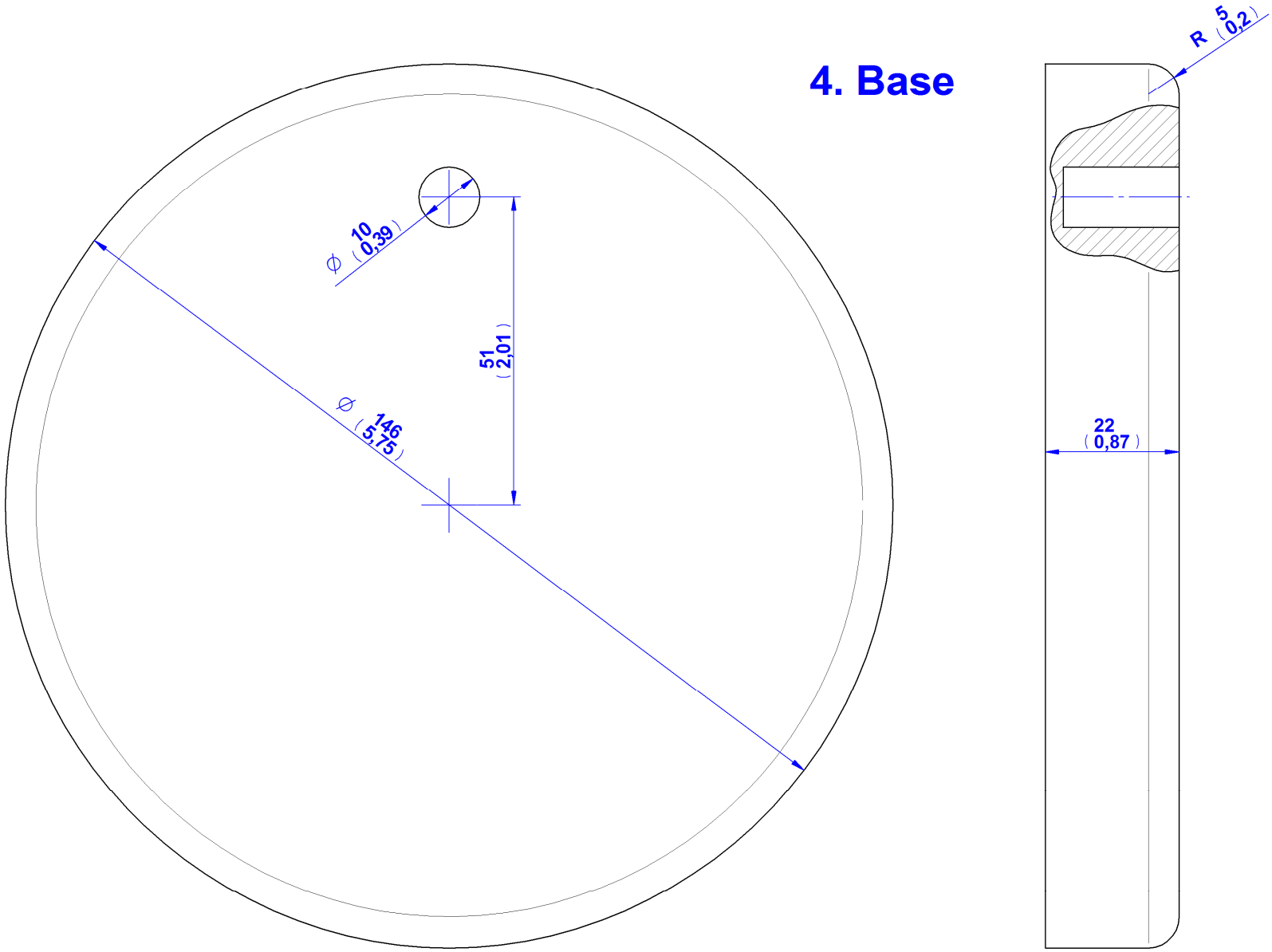

Assemblage instructions
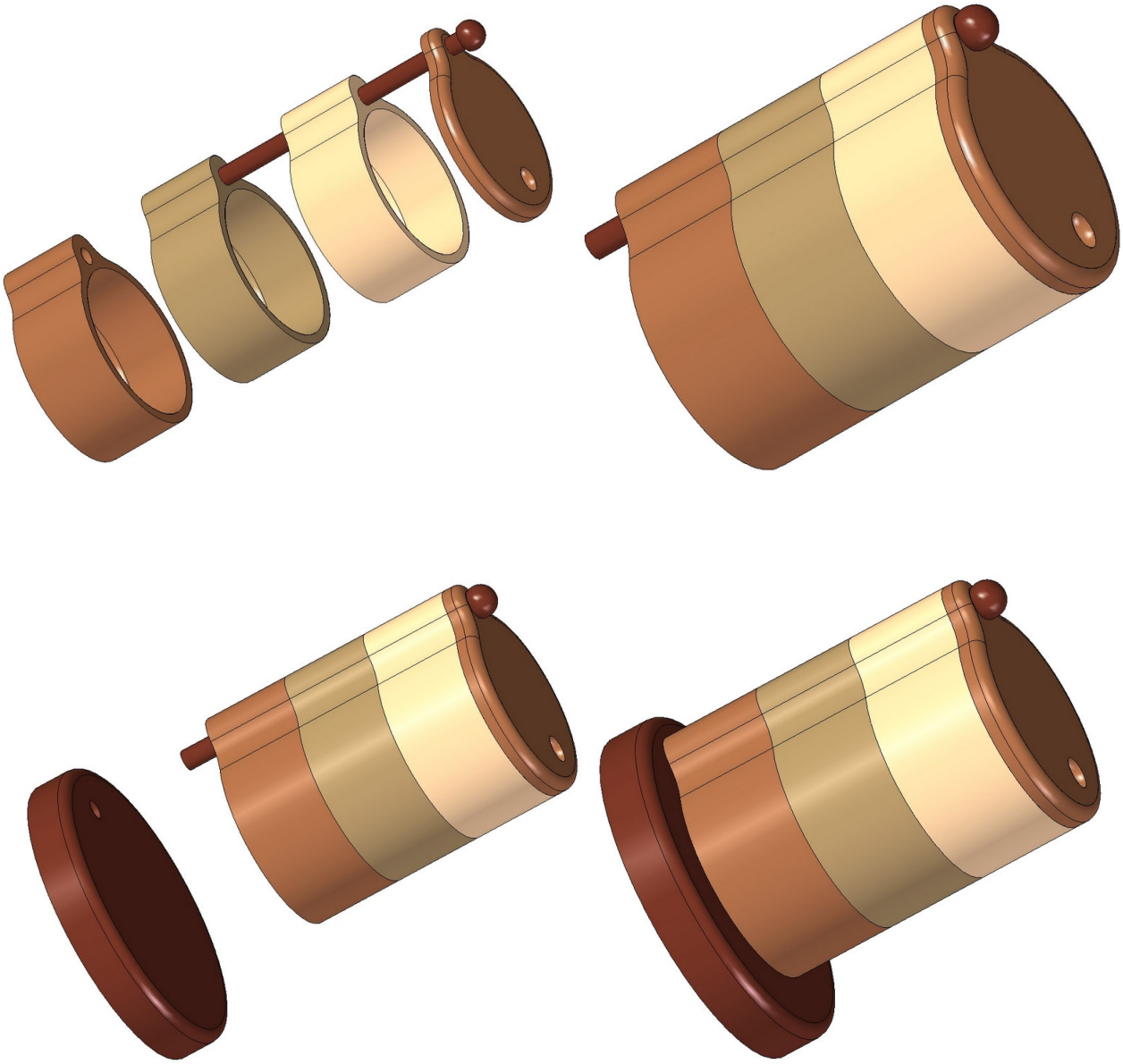
Attach the Bowls (part 1), Axle (part 2) and the Cover (part 3) to the Base (part 4) using glue.